Assembly Instruction

Swivel Bar Stool

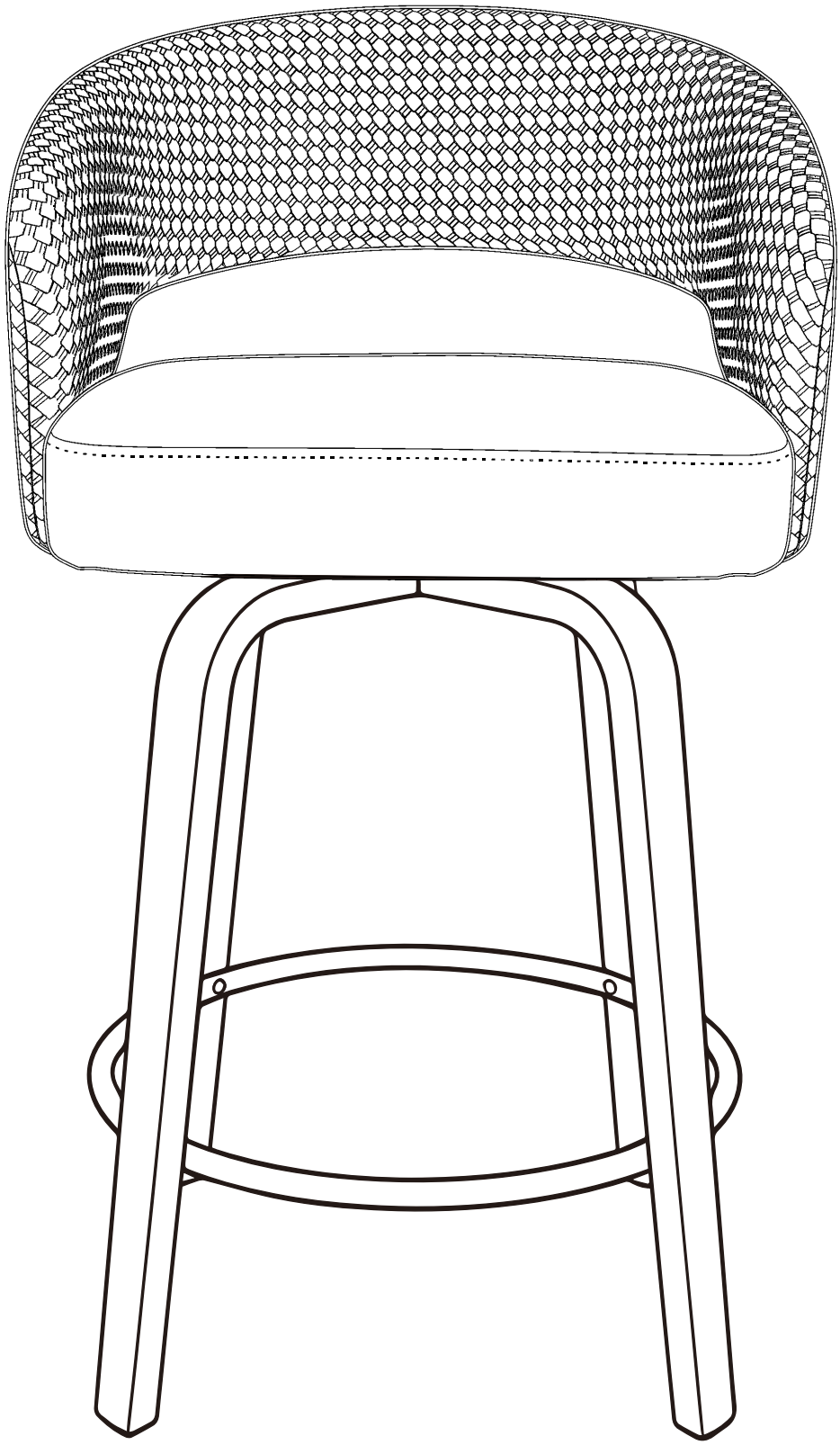

Parts List

Number	Name	Part	Qty
1	Seat	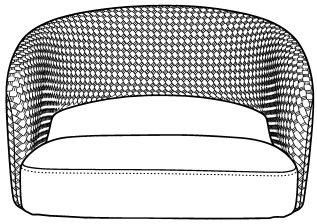	X1PC
2	Wood Legs		X4PC
3	Footrest	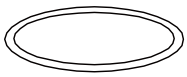	X1PC
4	Swivel Gear	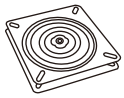	X1PC

Number	Hardware	Part	Qty
A	M6x25mm		X8+1EXT
B	M6x30mm	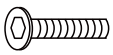	X4+1EXT
C	M6x16mm		X4+1EXT
E	Wrench		X1PC
	Metal Plate		X1PC

01

Tighten the four screws to a depth of 50%.

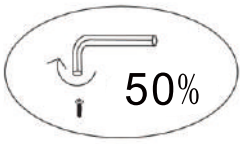

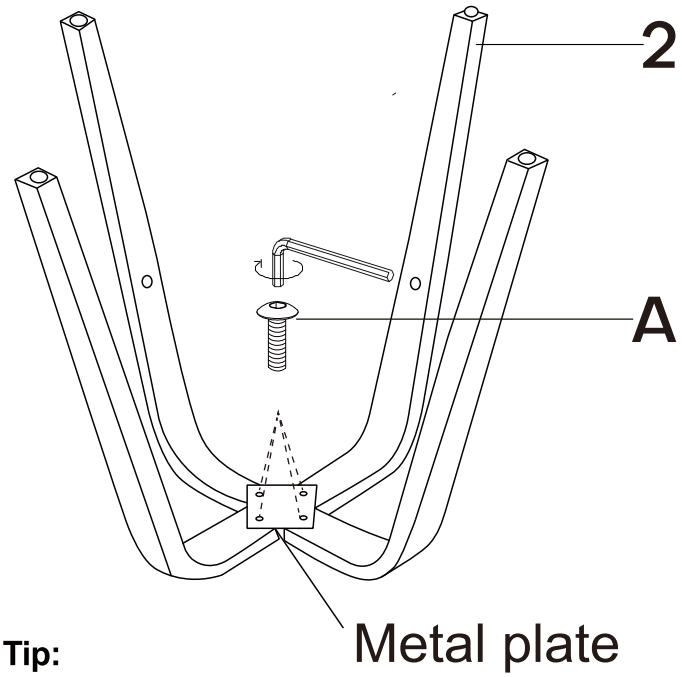

Tip:

If the screw hole on the last leg cannot align with the hole, loosen the screws on the front three legs to adjust the distance.

02

Tighten the four screws to a depth of 50%.

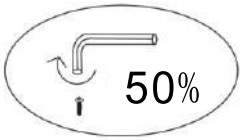

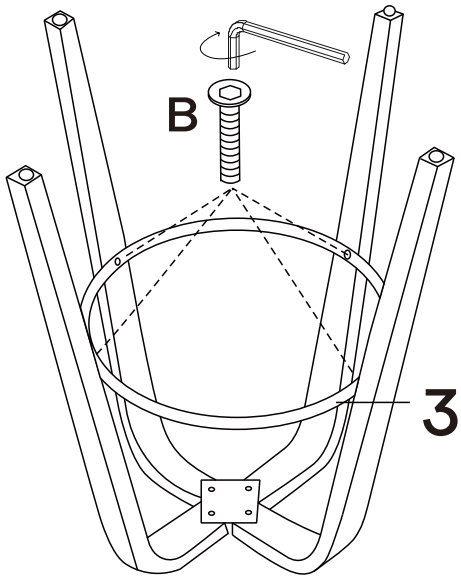

03

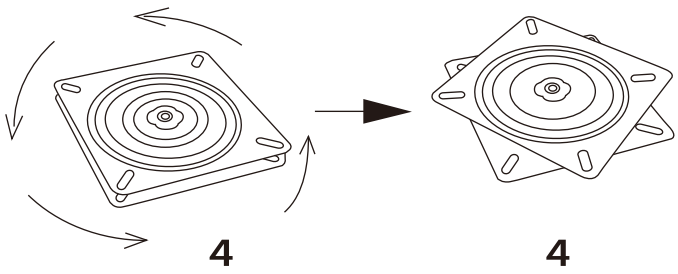

Swivel part (4) before install

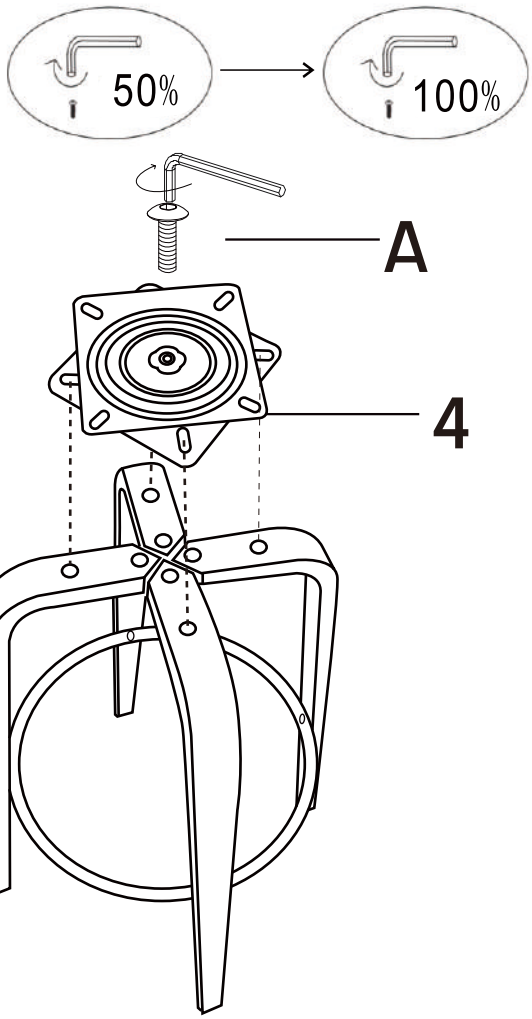

Finally tighten all screws to a depth of 100%.

04

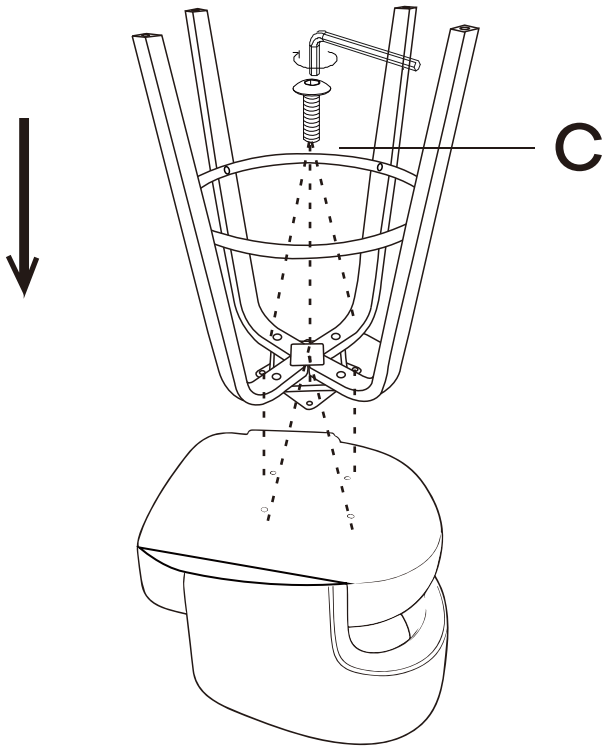

Assembly complete

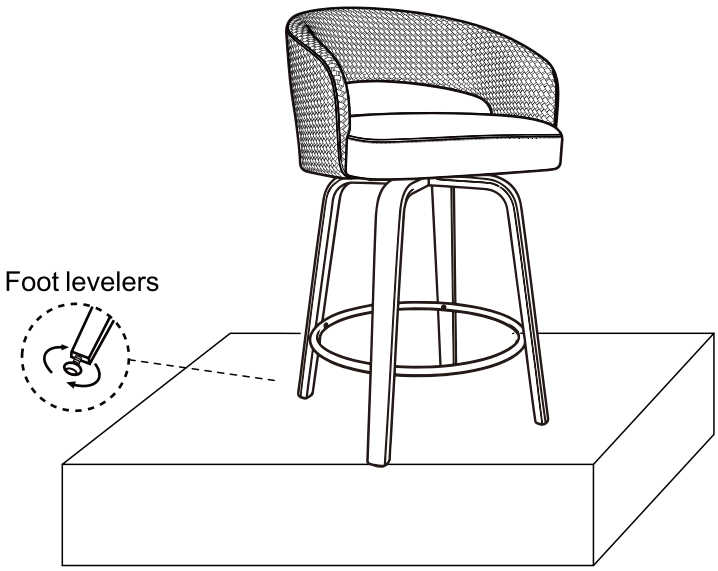

Note:

Each leg has an adjustable foot leveler to help level your chair.Rotate it to ensure the chair is flat on the floor !

Safety Guidelines

- Periodically inspect and tighten bolts to prevent loosening during use.
- Ensure all hardware remains securely fastened before using.
- Do not allow children to climb or jump on the stool.

Care Instructions

- Avoid placing hot items, direct sunlight, or harsh chemicals on the furniture
- Wipe dust with a soft, clean, lint-free cloth.
- Use adjustable foot levelers on each leg to stabilize the chair on uneven floors.
- Note: Indoor Use Only: Do not place the furniture outdoors or in damp environments.

Thank you for your purchase